TOSHIBA

UNINTERRUPTIBLE POWER SYSTEM

SINGLE PHASE - 2.4/3.6/6/8 kVA PLUS

1600 SERIES

INSTRUCTION MANUAL

May, 1999
Part#48539-000

Manufactured in the USA

IMPORTANT NOTICE

The instructions contained in this manual are not intended to cover all of the details or variations in equipment, nor to provide for every possible contingency to be met in connection with installation, operation, or maintenance. Should further information be desired or should particular problems arise which are not covered sufficiently for the purchaser's purposes, the matter should be referred to the local Toshiba sales office.

The contents of this instruction manual shall not become a part of or modify any prior or existing agreement, commitment, or relationship. The sales contract contains the entire obligation of Toshiba International Corporation's UPS Division. The warranty contained in the contract between the parties is the sole warranty of Toshiba International Corporation's UPS Division and any statements contained herein do not create new warranties or modify the existing warranty.

Any electrical or mechanical modifications to this equipment, without prior written consent of Toshiba International Corporation, will void all warranties and may void UL/CUL listing. Unauthorized modifications also can result in personal injury, death, or destruction of the equipment.

UNINTERRUPTIBLE POWER SUPPLY

Please complete the Extended Warranty Card supplied with this UPS and return it by prepaid mail to Toshiba. This activates the extended warranty. If additional information or technical assistance is required call Toshiba's marketing department toll free at (800) 231-1412 or write to: Toshiba International Corporation, 13131 W. Little York Road, Houston, TX 77041-9990.

Please complete the following information for your records and to remain within this equipment manual:

Model Number: _____

Serial Number: _____

Date of Installation: _____

Inspected By: _____

TABLE OF CONTENTS

TABLE OF CONTENTS (Cont'd)

INTRODUCTION

Thank you for purchasing the 1600 Plus Series UPS. This Series features a liquid crystal display along with the very latest state of the art microprocessor technology and IGBT transistors for fast, high power and low noise PWM (pulse width modulation) switching. Also featured is an input isolation transformer which is available as an option. This helps to provide total power conditioning and noise isolation even during bypass operation.

It is the intent of this manual to provide a guide for installing, operating, and maintaining the UPS. ***Please read this manual thoroughly before installation and operation***. All warnings and precautions should be observed for both personal safety and for proper equipment performance and longevity.

Read the important safety instructions on pages 8 and 9. Save these safety instructions for future reference.

This manual is divided into major sections of interest. Product description and application information can be found on page 10. Initial equipment inspection, storage, installation and operating precautions start on page 11.

Information about the equipment's electrical connections and communication interfaces begins on page 13. The equipment specifications for both standard and isolated models begin on page 18.

Battery backup time, recharging, low voltage tolerances, alarm and panel indicator functions are just a few of the functions mentioned in 'Operating the UPS' that begins on page 20.

The liquid crystal display (LCD), front panel layout, light emitting diodes (LED) displays, and the startup and data screens explanations begin on page 25.

The system protection system begins on page 40.

The preventive maintenance and/or periodic parts replacement recommendations along with front, rear, and side panel layout views, dimensional data and shipping weights are also shown starting on page 42.

Finally, we hope that you find this manual informative and easy to understand. Once again thank you for the purchase of this product.

TOSHIBA INTERNATIONAL CORPORATION

GENERAL SAFETY INSTRUCTIONS

Warnings in this manual appear in either of three ways:

1) *Danger warnings* - The danger warning symbol is an exclamation mark enclosed in a triangle which precedes the 3/16" high letters spelling the word "DANGER". The Danger warning symbol is used to indicate situations, locations, and conditions that exist and can cause serious injury or death:

DANGER

2) *Caution warnings* - The caution warning symbol is an exclamation mark enclosed in a triangle which precedes the 3/16" high letters spelling the word "CAUTION". The Caution warning symbol is used to indicate situations and conditions that can cause operator injury and/or equipment damage:

CAUTION

3) *Attention warnings* - The attention warning symbol is an exclamation mark enclosed in a triangle which precedes the 3/16" high letters spelling the word "ATTENTION". The Attention warning symbol is used to indicate situations and conditions that can cause operator injury and/or equipment damage:

ATTENTION

Other warning symbols may appear along with the *Danger* and *Caution* symbol and are used to specify special hazards. These warnings describe particular areas where special care and/or procedures are required in order to prevent serious injury and possible death:

1) *Electrical warnings* - The electrical warning symbol is a lighting bolt mark enclosed in a triangle. The Electrical warning symbol is used to indicate high voltage locations and conditions that may cause serious injury or death if the proper precautions are not observed:

2) *Explosion warnings* - The explosion warning symbol is an explosion mark enclosed in a triangle. The Explosion warning symbol is used to indicate locations and conditions where molten, exploding parts may cause serious injury or death if the proper precautions are not observed:

IMPORTANT SAFETY INSTRUCTIONS

SAVE THESE INSTRUCTIONS

This manual contains important instructions for 2.4, 3.6, 6.0, and 8.0 kVA that should be followed during the installation and maintenance of the UPS and its batteries.

Hardwire type UPS units are not equipped with an overcurrent-protection device, nor an output disconnect for the ac output. Therefore, a circuit breaker should be provided by the user between the UPS output and the load input. This device should be rated as follows:

2.4 kVA: 240 Vac, 15A
3.6 kVA: 240 Vac, 20A
6 kVA: 240 Vac, 30A
8 kVA: 240 Vac, 40A

The maximum ambient temperatures in which the UPS units should be operated are as follows:

2.4 kVA: 104° F (40° C).
3.6 kVA: 104° F (40° C).
6 kVA: 104° F (40° C).
8 kVA: 104° F (40° C).

The nominal battery voltages for these models are as follows:

2.4 kVA: 144Vdc
3.6 kVA: 144Vdc
6 kVA: 216Vdc
8 kVA: 144Vdc

Servicing of the batteries should only be performed by a qualified Toshiba Representative who is knowledgeable of batteries and the required precautions. Keep unauthorized personnel away from batteries. To arrange for battery replacement, contact your nearest Toshiba authorized service center.

CAUTION Misuse of this equipment could result in human injury and equipment damage. In no event will Toshiba Corporation be responsible or liable for either indirect or consequential damage or injury that may result from the use of this equipment.

CAUTION Do not dispose of the batteries in a fire. The batteries may explode.

CAUTION Do not open or mutilate the batteries. Released electrolyte is harmful to the eyes and skin and could also be toxic.

IMPORTANT SAFETY INSTRUCTIONS (cont'd)

DANGER ***A battery can present a risk of electrical shock and high short circuit current.*** Observe the following when working on batteries:

1) Verify that the UPS is off and that the power cord is disconnected from the power source.
2) Remove watches, rings or other metal objects.
3) Use tools with insulated handles to prevent inadvertent shorts.
4) Wear rubber gloves and boots.
5) Do not lay tools or metal parts on top of batteries.
6) Determine if the battery is inadvertently grounded. If inadvertently grounded, remove source of ground. ***Contact with any part of a grounded battery can result in electrical shock.*** The likelihood of such shock will be reduced if such grounds are removed during installation and maintenance.

INSTRUCTIONS IMPORTANTES CONCERNANT LA SÉCURITÉ

CONSERVER CES INSTRUCTIONS

Cette notice contient des instructions importantes concernant la sécurité.

ATTENTION Une battery peut présenter un risque de choc électrique, de brûlure par transfert d' énergie.

ATTENTION L' élimination des batteries est règlementèe. Consulter les codes locaux à cet effet.

Product Description

Theory of Operation

An uninterruptible power supply is a system that is installed between the commercial power and the load equipment. It is used during short-term blackouts or brownouts. The UPS provides steady ac output power during these commercial power interruptions. This power is provided for a long enough time so that the load can be shut down in an orderly fashion. This prevents loss of data and possible damage to both hardware and software.

During normal operation the UPS uses commercial ac power. In addition, it takes in all of the high voltage spikes and transients caused by switching and faults, and all of the common mode and normal mode noise which is associated with commercial ac power. The UPS converts it all to flat dc power. From this dc power, the UPS charges the batteries and generates its own extremely high quality ac waveform output. The result of this process is maximum power conditioning and regulation.

If the ac power supplied to the UPS drops below a specified voltage level, the unit's batteries automatically begin supplying power instead of receiving it. This insures that the loads connected to the UPS continue to receive power with no interruption. When ac input power becomes available again, operation returns to normal. The unit's batteries begin to recharge so they will be ready for the next power interruption.

Application and Use

Toshiba's 1600 Plus Series of on-line uninterruptible power supply (UPS) systems provide continuous computer-grade ac power in a compact, high performance, and energy efficient unit. The UPS unit assures safe and reliable operation of critical office equipment. This can range from word processors and personal computers to mini-computers and local area networks. All units feature an audible alarm which sounds if the battery voltage drops below standard during use. This is an additional aid to help in retaining the valuable office data banks. All units allow for computer interfacing.

Output Rating

Toshiba's 1600 Series (240/208V) offers UPS models with the following capacities and voltages: When the unit is operating at 240 volts, UPS models UE3G2L024C6(T)(P#), UE3G2L036C6(T)(P#), UE3G2L060C6(T)(P#), and UE3G2L080C6(T)(P#) will supply the maximum rated power to the loads (output capacity: 2.4/3.6/6/8 kVA). If the unit is operating at 208 volts, UPS output capacity will be reduced to 87% of maximum rated power capacity (output capacity: 2.08/3.12/5.2/6.93 kVA).

Power Backup

When an electrical power failure occurs, the UPS unit's internal maintenance-free batteries automatically supply back-up power to the load without interruption. For example, when used to support a computer, the UPS back-up assures enough additional time to complete the activity and store data. This allows an orderly shutdown after a power failure has occurred.

Power conditioning

When commercial power is present, the UPS supplies conditioned power to the load while maintaining its batteries in a charged condition. The UPS protects against the normal, every day problems associated with heavy use of raw commercial power, including power sags, surges, signal interference, and spikes. This protection keeps power-line problems from reaching your load, where they can cause equipment to operate erratically, or damage software and hardware.

Inspection/Storage/Disposal

Inspection of the new UPS equipment

Upon receipt of the UPS, a careful inspection for shipping damage should be made.

After Uncrating:

1) Check the unit for loose, broken, bent or otherwise damaged parts. If damage has occurred during shipment, keep all original crating and packing materials for return to shipping agent. Warranty will not apply to units which are damaged during shipment.

2) Check to see that the rated capacity and the model number specified on the nameplate conform to the order specifications.

Storage of UPS equipment.

If the UPS equipment is to be subject to long or short term storage the following guidelines should be used.

Avoid:

1) Storage in sites subject to extreme changes in temperature or high humidity.

2) Storage in sites subject to exposure of high levels of dust or metal particles

3) Storage on inclined floor surfaces or in sites subject to excessive vibration.

Before storing:

1) Allow UPS to be operated for 24 hrs. to ensure that the batteries are fully charged.

2) Stop the unit (see "Stopping the UPS" on page 39).

3) Place the unit's MCCB switch (see page 44 for location) in the "off" position.

Storing:

1) Store within a temperature range of -20° to 40° C (-4° to 104° F).

2) For best results, store the UPS in the original shipping container and place on a wood or metal pallet.

3) The optimum storage temperature is 21° C (70° F). Higher ambient temperatures cause UPS batteries to need recharging more frequently.

After storing:

1) If stored in an ambient temperature under 20° C (68° F); recharge the batteries every 9 months.

2) If stored in an ambient temperature of 20° to 30° C (68° to 86° F); recharge the batteries every 6 months.

3) If stored in an ambient temperature of 30° to 40° C (86° to 104° F); recharge the batteries every 3 months.

Disposal

Please contact your state environmental agency for details on disposal of electrical components and packaging in your particular area.

It is illegal to dump lead-acid batteries in landfills or dispose of improperly.
Please help our Earth by contacting the environmental protection agencies in your area, the battery manufacturer, or call Toshiba toll-free at (800) 231-1412 for more information about recycling.

Precautions

Installation Precautions

CAUTION

1) Install the unit in a well ventilated location; allow at least 10 cm (4 inches) on all sides for air ventilation and for maintenance.

2) Install the unit in a stable, level, and upright position which is free of vibration.

3) Install the unit where the ambient temperature is within the correct operating range (see UPS Specifications pages 18 -19).

4) Do not install the UPS in areas that are subject to high humidity.

5) Do not allow direct sunlight to shine on the unit.

6) Do not install the UPS in areas which are subject to contamination such as high levels of airborne dust, metal particles, or inflammable gas.

7) Avoid installation near sources of electrical noise and always make sure that the unit earth ground is intact to prevent electrical shock and to help reduce electrical noise.

8) Do not install where water or any foreign object may get inside the UPS.

9) This UPS generates and can radiate radio-frequency energy during operation. Although RFI noise filters are installed inside the unit there is no guarantee that the UPS will not influence some sensitive devices which are operating close by. If such interference is experienced, the UPS should be installed farther away from the affected equipment and/or powered from a different source than that of the affected equipment.

10) User should provide output overcurrent protection for hardwired UPS versions. See Safety Instructions on page 8 for the correct device rating.

Operating Precautions

CAUTION

1) The UPS should not be powered up until the entire operation manual has been reviewed.

2) The input power source voltage must be within +10% to -30% of the rated input voltage. The input frequency must be within the rated input frequency range. Voltages and frequencies outside of the permissible tolerance range may cause internal protection devices to activate.

3) The UPS should not be used with a load whose rated input is greater than the rated UPS output.

4) Do not use the UPS to provide power to motors that require high starting current or a long starting time such as vacuum cleaners and machine tools (oversizing for lock rotor current required).

5) Do not insert metal objects or combustible materials in the unit's ventilation slots.

6) Do not place, hang, or paste any objects on the top or on the exterior surfaces of the UPS.

UPS Connections

Terminal Block

The following illustration is a detail view of the terminal block and wiring connections used for ***208/240 volt units*** (see page 44 for terminal block location).

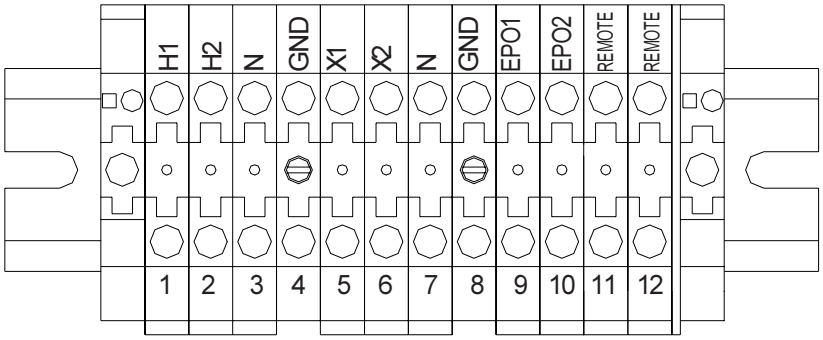

Wire Size and Tightening Torque

Use the following table to select the correct wire size and terminal lug tightening torque for I/O wire connections.

Item	Terminal number	AWG for 2.4 kVA	AWG for 3.6 kVA	AWG for 6 kVA	AWG for 8 kVA	Tightening Torque (Pounds-Inches)
AC input lines	#1 and #2	14	12	10	8	14.2
AC input neutral	#3	14	12	10	8	14.2
AC output lines	#5 and #6	14	12	10	8	14.2
AC output neutral	#7	14	12	10	8	14.2
Ground	#4 and #8	10	10	10	10	14.2
EPO switch	#9 and #10	16	16	16	16	9.0
Remote switch	#11 and #12	16	16	16	16	9.0

(1 Newton-meter = 8.8 pound-inches)

UPS Connections

Communication Interface

Remote Contact (IBM AS/400)

The remote interface is a standard feature and is available as solid state relay switch contacts through a DB9 male connector located on the back side of the UPS (see page 44 for DB9 connector location). The following chart shows the solid state relay pin assignments for each signal and the associated DB9 connector pinout.

Maximum current carrying capacity of the switch

Voltage	Current
48Vdc peak	100mAdc peak
30Vac rms (42Vac peak)	70mAac rms (100mA peak)

DB9 Male Connector Outline
(facing connector)

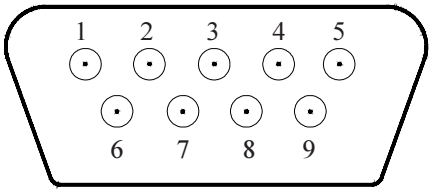

Pin	Signal Function	Logic	In the UPS
1	Fault signal	Closed when fault detected	
2	UPS stop common	Backup stop when the level changes from Low (-3 to -15V) to High (+3 to +15V)	
3	UPS stop signal input		
4	Normal input power supply	Closed with normal supply power	
5	Signal common	Common signal return	
6	Bypass operation	Closed during bypass operation	
7	Battery voltage drop	Closed at a voltage drop	
8	UPS operation	Closed during inverter operation	
9	Power failure signal	Closed at a power failure	

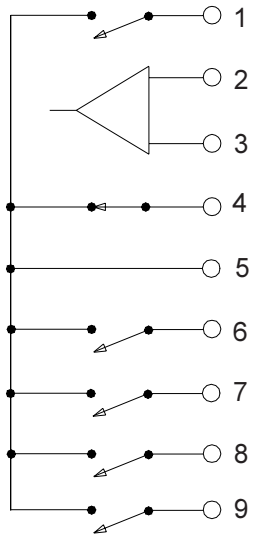

Notes:

1) Pin "switches" are shown in their ***inactive states*** (if battery voltage is low pin 7 will be connected to pin 5).

UPS Connections

Communication Interface (cont'd)

UPS Stop Signal Operation

When the UPS stop signal is sent to the UPS through pin 2 and 3 of the external contact interface, it is possible to automatically reset the following operation systems (OS), which can automatically implement the shutdown function and restart the operation:

Applicable OS: Windows NT, IBM OS/2 LAN server, LANtastic
Not applicable: NetWare

When the power fails, the OS detects the power failure signal from the UPS and starts the shutdown process.

At the end of the shutdown process, the OS outputs a stop signal to the UPS, and the UPS stops.

When the power recovers, the UPS automatically starts output and restarts the OS. Even when the power recovers while in a shutdown process, the UPS temporarily cuts off the output (10 - 20 seconds) and then restarts the OS within 10 minutes after the recovery from power failure. In this case the UPS cuts off output even with normal input power. Connect the UPS stop signal of the external contact interface only for the automatic processing so that the UPS output will not be cut off by mistake. If a stop signal is input to the UPS 10 minutes or more after the recovery from a power failure, then the UPS ignores this signal and continues to output power.

If the computer is started/restarted within 10 minutes after the recovery from a power failure, the power supply may be reset while the computer is restarting.

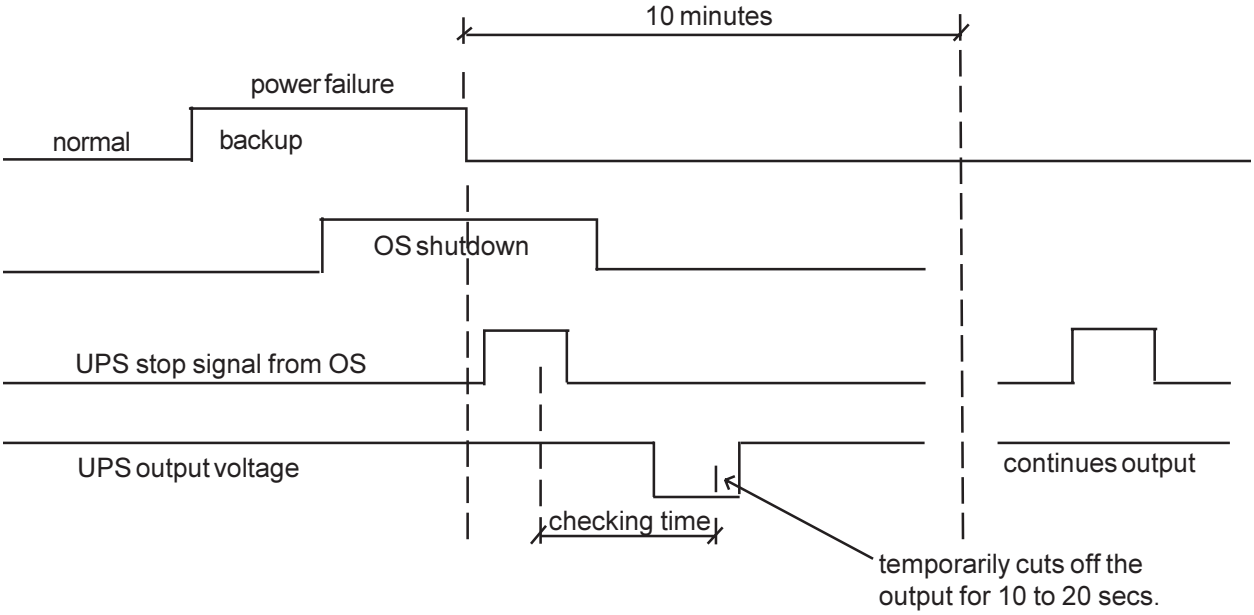

UPS Connections

Communication Interface (Cont'd)

RS-232C

The RS-232C serial communication interface is available through a DB9 female connector located on the back side of the UPS (see page 44 for DB9 connector location). This interface allows control of the UPS from a personal computer running special Toshiba software. The computer and the UPS are connected through a serial RS-232C communication port. The available data from the UPS, via the RS-232C communication link, is shown below:

Operating conditions	Input voltage Output voltage Output current Battery voltage Input frequency Output frequency
UPS operating status (described as 'yes' or 'no')	Utility power OK Low battery voltage detected UPS in BYPASS mode UPS in NORMAL mode Input and output frequency synchronized UPS 'fault' occurred
'Fault' details (described as 'occurred' or 'not occurred')	DC bus overcurrent DC bus overvoltage DC bus undervoltage Input overcurrent Overheat Overload being timed Overload (allowable time exceeded) Output overvoltage (during NORMAL mode) Output undervoltage (during NORMAL mode)

The connector pin assignment and female connector outline are illustrated below.

RS-232C Connector Pin Assignment

Pin	I/O	Symbol	Description
1	This pin is not used		
2	Input	RXD	Receive data
3	Output	TXD	Transmit data
4	Output	DTR	Data terminal ready
5	—	SG	Signal ground
6	Input	DSR	Data set ready
7	Output	RTS	Request to send
8	Input	CTS	Clear to send
9	This pin is not used		

DB9 Female Connector Outline
(facing connector)

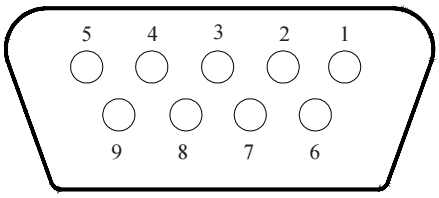

UPS Connections

Communication Interface (Cont'd)

RS-232C Interface Communication Specifications

The RS-232C serial communication specifications are shown below:

1) Communication system	half-duplex communication system (serial transmission)
2) Connection control system	centralized control, polling/selecting system
3) Transmission speed	1200/2400/4800/9600 baud
4) Synchronization method	start-stop synchronization
5) Transmission code	JIS X 0201,7bits (ANSI)
6) Error detection	vertical parity check, even (VRC) longitudinal parity check, even (LRC)
7) Error correction	None
8) Response monitoring	None
9) Transmission character format	10 bits
10) Bit sending order	low-order bits first
11) Frame length (information message)	variable length

SNMP

The Simple Network Management Protocol (SNMP) communication interface is available as an option. The Toshiba SNMP card slides into the SNMP port located on the back side of the UPS (see page 44 for SNMP port location). This optional interface allows the UPS to be monitored across the network via SNMP to a Network Management Station (NMS). The following diagram shows the flow of the Network Management Station.

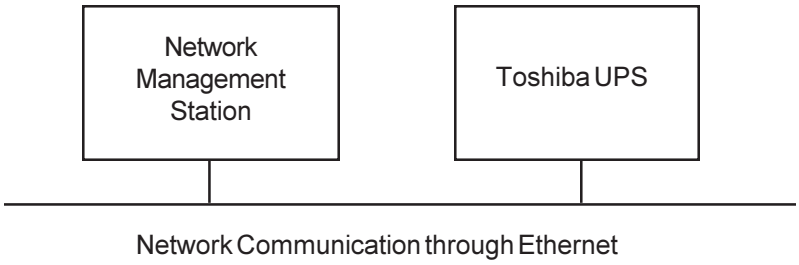

Note:

The UPS communication mode setting must be set to SNMP mode when using the SNMP option card (See Comm Mode variable in the 'Data Setting Screens' on page 30 and 32).

UPS Specifications

STANDARD AND ISOLATED MODELS

CAPACITY	2.4kVA (1.68kW)	3.6kVA (2.52kW)	6kVA (4.2kW)	8kVA(5.6kW)
General				
Topology	True On-line, Isolation transformer on input of isolated models			
Certifications	UL,CUL,FCC class A			
Input Characteristics				
Input voltage	Single-phase 240/208Vac (4 wire input / L-L, N, G), +10% to -30% (Requires 2-120Vac to Neutral phases, unit automatically senses 120 or 180 deg phase shift)			
Input frequency	45 - 65Hz (autosensing)			
Input capacity	2.4kVA	3.6kVA	6.0kVA	8.0kVA
Input power factor	> 0.95 for all loads			
Current THD	< 5% (linear load), < 10% (non-linear load)			
Battery Characteristics				
Battery type	Valve Regulated Lead Acid, Flame Retardant			
Backup time, fully charged @ 0.7 power factor, 77 F	7 minutes minimum			
Recharge time	24hr. (full), 12hr.(90%) for internal batteries only			
Output Characteristics				
Output voltage	Single-phase 240/208/120Vac (4 wire output / L-L, N, G) (Output synchronizes to input voltage)			
Output voltage regulation	+/- 3%			
Output frequency	+/-0.5Hz/1Hz/1.5Hz (factory or authorized service center selectable only)			
AUTO/MAN frequency	Factory or authorized service center selectable only			
Voltage THD	< 3% for linear load; < 6% for non-linear load			
Common-mode noise	< 1Vrms			
Rated load power factor	0.7 (0.6 - 1.0) lag			
Efficiency (ac-dc-ac)	> than 85% (without battery charger)			
Voltage transient	< +/-8% (Load of 0 to 100 %)			
Rated output current (rms)	10A	15A	25A	33.3A
Max. peak output current	30A	45A	75A	100A
Inverter overload capacity	125%-30sec/150%-10sec			
Bypass overload capacity	125%-10min./1000%-1 cycle			
Crest factor	3.0			
Environment				
Operating temperature	0 ~ 40° C (15 ~ 25° C recommended)			
Storage temperature	-15 ~ 40° C			
Installation area	To be installed in a well ventilated area free of airborne dust, metal particles or flammable gas, allow at least 4 inches on all sides			
Operating humidity	30 ~ 90%(no condensation)			
Altitude	< 1000m above sea level (output derated when used above 1000m)			
Acoustical noise	50 dB (A) maximum @ 1 meter from front panel			
Operation Diagnostics				
Battery check	Performed on start up, by schedule, on-demand (user configurable)			
Input OV protection	Standard			
Battery lifetime	UPS calculates battery replacement time based upon battery ambient temperature (LCD display, LED and beeps)			
UPS lifetime	LCD indication given when usable lifetime of UPS is reached			
Internal temperature	UPS gives indication of internal temperature, alarm when high temperature			
Event data storage	64-Supply Mode, 32-Back up, 16-Faults			

UPS Specifications (cont'd)

STANDARD AND ISOLATED MODELS

CAPACITY	2.4kVA(1.68kW)	3.6kVA(2.52kW)	6kVA(4.2kW)	8kVA(5.6kW)
Applications				
Generator	Generator compatibility			
Switches				
Bypass switch	Static switch <1/4 cycle (50Hz:5ms/60Hz:4.16ms)			
Bypass disable	Factory or authorized service center selectable only			
Automatic retransfer	Provided (can be disabled from front panel)			
User interface				
Real Time Clock	Standard, Minimum 3 days backup during power loss			
Schedule operation	Schedule ON/OFF operation of UPS using communication software			
RUN/STOP disable	User can disable RUN/STOP; Selectable by keypad			
Auto Start	UPS has option for UPS to start automatically when AC is applied			
Remote ON/OFF	Standard, external terminal			
LED display	4 LED's indicating input/output condition, warning and battery operation			
LCD screen	16 characters x 2 lines			
UPS operation: 6 keys	RUN/STOP, SET/Monitor, shift/Select, Del/(page up), Reset/(page down)			
Buzzer volume	Low, high, mute; Selectable by keypad			
Power connections	Hard wire (Standard)			
Emergency Power Off	Standard (Terminal contacts only)			
Remote contacts	Standard (INV, BYP, BATT, LB, AC, FLT)			
RS232 ASCII interface	Standard			
Mechanical Design				
Enclosure	Enclosure of unit made from sheet metal meeting NEMA1 and UL Type 1			
Size (HxWxD) inches(max)	21.75 x 10 x 30	21.75 x 10 x 30	27.5 x 10 x 33	28.25 x 13 x33.5
Paint system	Powder coating.			
Fan panel	Panel mounted on back of UPS to allow for easy replacement of fans without turning UPS off.			
Battery System				
Battery replacement	Slide out battery packs accessible from front of UPS, factory or authorized service center serviceable only			
Battery packs	Designed for battery acid leakage containment with (6) batteries per pack.			
Battery pack size (HxWxD) inches (max)	5 x 7.3 x 18.2			
Battery pack quantity	2	2	3	4

Operating the UPS

Battery Backup Time and Discharge Process

The UPS unit's batteries provide about 7 minutes of back-up time for the 2.4 kVA, 3.6 kVA, 6 kVA, and 8 kVA models. These times are valid when the unit is operating under full load (output capacity is derated to 87% of nominal capacity when the output voltage is 208 Vac). When these models are operating at half load, the batteries can provide about 20 minutes of back-up time. The exact length of these times will depend on the UPS model used, condition of the batteries, amount and type of load, temperature and other variables. See battery backup time in 'Standard Specifications' beginning on page 18.

The following illustration graphically shows the battery discharge process at full load conditions.

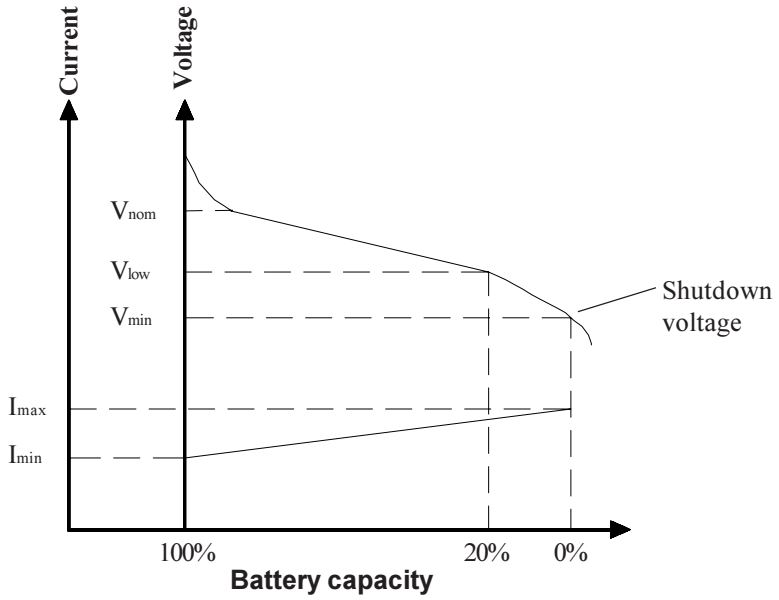

Battery Low Voltage Tolerances

Excessive discharge will cause the UPS unit's battery voltage to drop. The chart shown below lists the voltage level at which each UPS unit's low-voltage alarm will sound and also at what level the low-voltage condition will cause the unit to automatically shut down.

UPS Capacity	2.4 kVA	3.6 kVA	6 kVA	8 kVA
Nominal voltage (Vnom)	144Vdc	144Vdc	216Vdc	144Vdc
Alarm voltage (Vlow)	130Vdc	130Vdc	198Vdc	130Vdc
Shutdown voltage (Vmin)	115Vdc	115Vdc	175Vdc	115Vdc

Operating the UPS

Battery Recharging

The illustration below shows a graphical representation of the UPS battery recharge process after a full discharge.

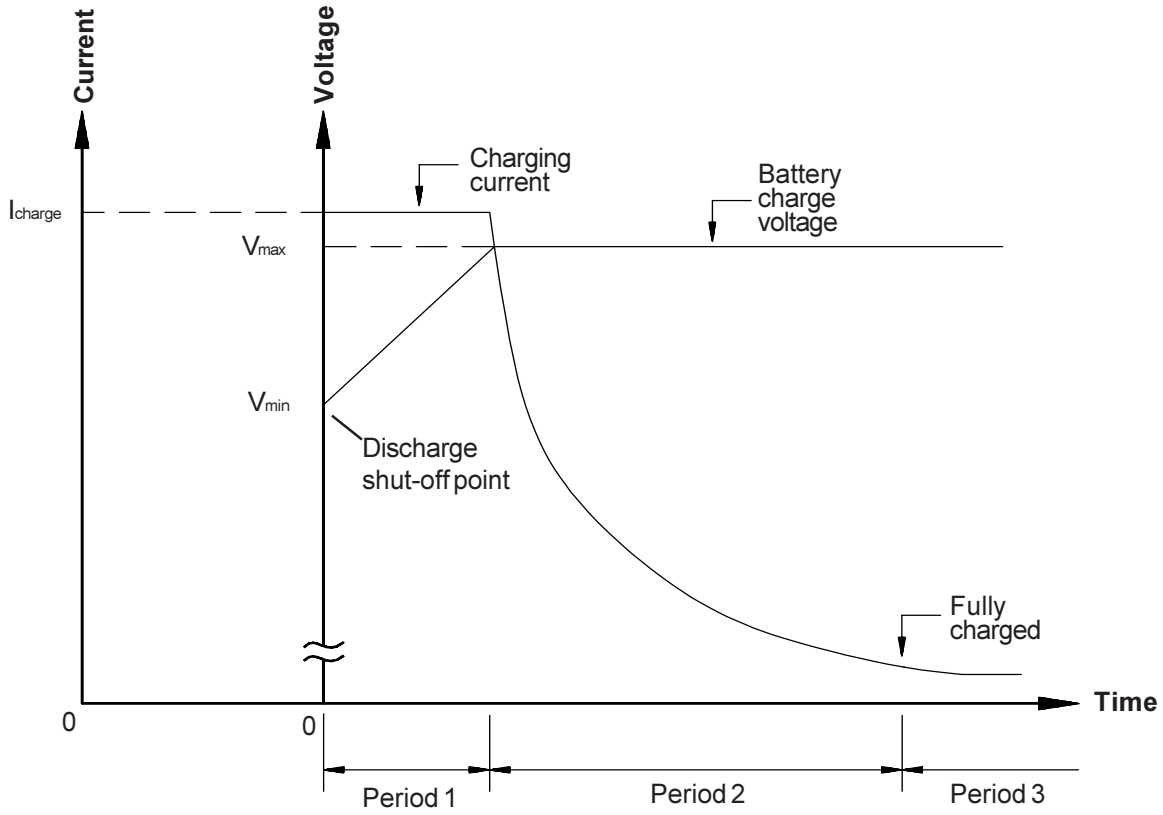

The recharge process usually consists of three periods. During the first period, the current is maintained at approximately 1 ampere. This current limit is the maximum value that can be used to charge the batteries (for minimal recharge time) while assuring safety and long battery life. In the second period, constant-voltage control starts and current gradually decreases as the batteries charge to their normal fully charged state. In the third period, a slight "trickle" current continues to flow into the batteries to keep them fully charged and "floating" at the normal Vdc level. A full recharge usually requires 24 hours (90% recharge in 10 hours) after a complete discharge.

The following chart shows the rated maximum and minimum battery voltages, and the charge current for each of the sizes.

Rated Battery Voltages

Model	Vmax	Vmin	Icharge
2.4 kVA	163.8	116.7	1.0 amp
3.6 kVA	163.8	116.7	1.0 amp
6.0 kVA	245.7	175	1.0 amp
8.0 kVA	163.8	116.7	1.0 amp

Operating the UPS

Operation Modes

AC Input Mode (normal operation)

The following illustration shows circuit power flow when the UPS is operating normally in the ac input mode. The UPS unit's rectifier, including a boost chopper circuit, converts ac input power to dc power. The boost chopper circuit maintains a constant voltage, with current limiting, for charging the batteries. It also supplies a dc voltage of the proper level to the inverter section. The inverter section generates a high quality sinewave output voltage. The unit's batteries are always maintained in a constantly charged state when the UPS is in the normal operation mode.

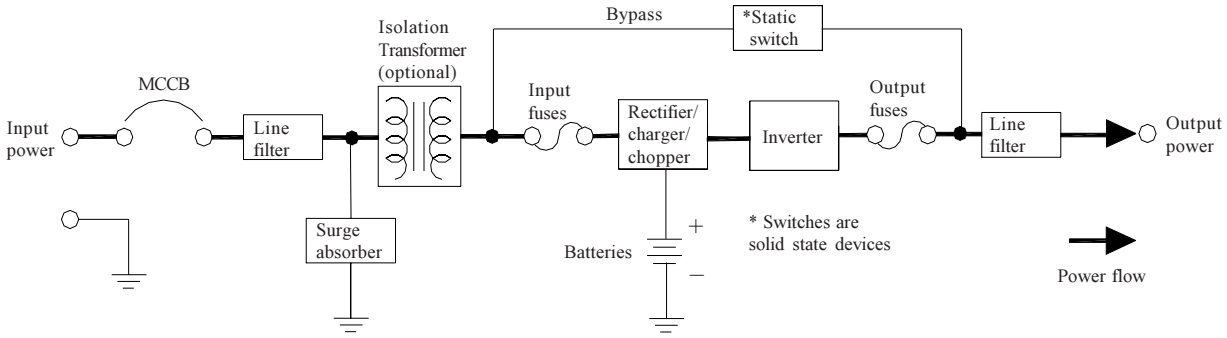

Power flow in AC input mode for the 2.4, 3.6, 6, and 8 kVA Models

Circuit-bypass Mode

If the UPS unit is severely overloaded or develops an internal fault, power flow is automatically switched from the unit's main circuit to the bypass circuit. Power flow through the bypass is shown in the following illustration. This change-over occurs automatically in less than 4 milliseconds in phase. The switching period is not long enough to cause interruptions to occur in most loads. If the power flow is transferred to the bypass circuit because of an overload and that overload condition ends within a specified period of time then the power flow will be "re-transferred" to the AC input mode (normal operation) automatically.
If the power flow is transferred to the bypass circuit due to an external fault the UPS will shut down power through the bypass to the load and indicate a system fault message. If the power flow is transferred to the bypass circuit due to an internal fault the UPS will continue to supply power to the load through the bypass and indicate a system fault message (see system fault message DC-OC on page 41). ***If the power flow is transferred to the bypass circuit due to an overload condition*** (see system warning message OL: REDUCE LOAD on page 36 and AUTO RETRANSFER on page 38)***, then the power flow will automatically transfer from the UPS's bypass circuit back to the inverter circuit after removing the overload if set to do so*** (see auto-transfer setting on page 32).

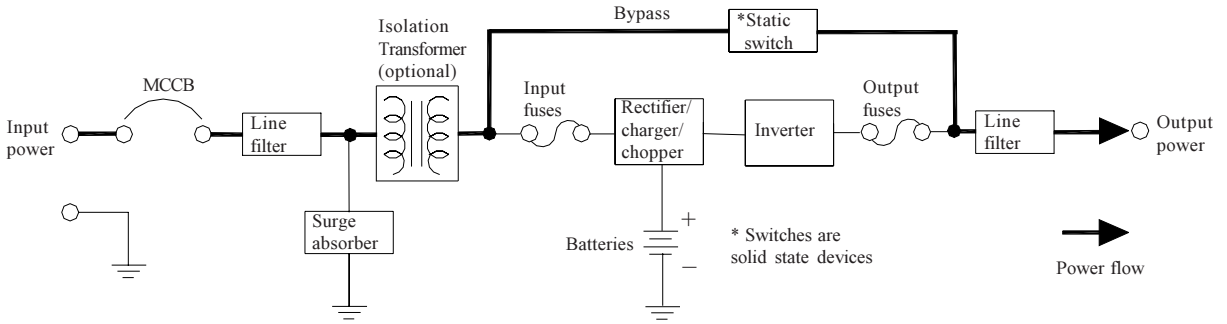

Power flow in circuit-bypass mode for 2.4, 3.6, 6, and 8 kVA Models

Operating the UPS

Operation Modes (Cont'd)

Battery Backup Mode

The following illustration shows power flow during the battery backup mode. When commercial ac power failures occur, the UPS's batteries instantly begin supplying dc voltage to the UPS's main inverter circuit. This circuit changes (inverts) the dc power into ac power. The ac power is available at the unit's output. This back-up process will continue until the UPS's battery voltage drops below a specific minimum level. When this occurs, the batteries will stop supplying power to the load. This minimum level is the rated minimum voltage (Vmin). The rated battery voltage chart on page 20 shows (Vmin). The battery backup time and discharge process is explained on page 20.

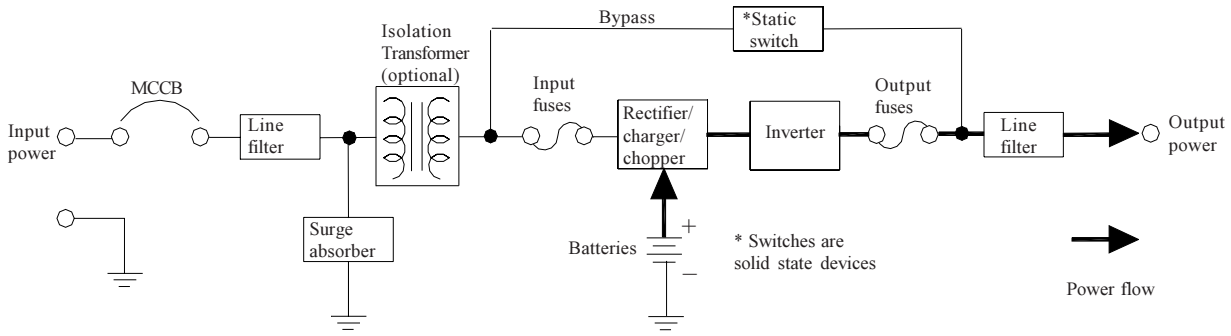

Power flow in battery backup mode for the 2.4, 3.6, 6, and 8 kVA Models

EPO (Emergency Power Off) Function

These units are equipped with terminals for receiving an emergency power-off (EPO) "closed contact" switch command from a remote location (see 'terminal block details' on page 13 and terminal block location on page 44). This safety feature enables quick shut-down of the UPS's ac output and battery circuits. Usually the emergency power off switch is installed in a central location that is easily accessible to personnel concerned with the operation of the UPS unit and the load equipment connected to it. The EPO function is initiated by pressing the switch to the closed "shutdown" position. The effect of using the EPO switch is the same whether the UPS unit is in the ac input mode (see page 22), battery backup mode (see page 23), or the circuit bypass mode (see page 22). The following figure shows the UPS condition after application of the EPO switch.

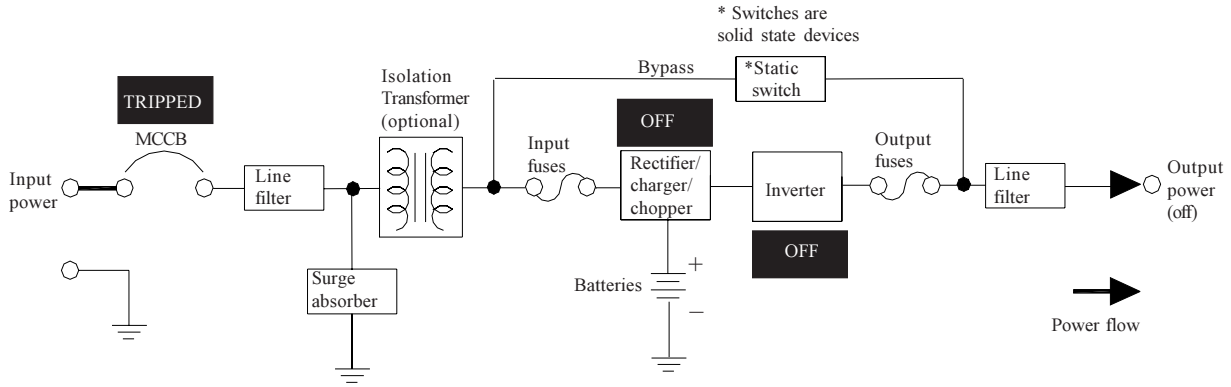

Operating the UPS

Audible Alarm Functions

Audible alarms will sound when the UPS unit is in the battery backup mode, has a fault, has low battery voltage, or is in an overload condition. The following chart shows the audible alarm pattern durations for each condition. Time units are shown in seconds. The audible alarm can be silenced by pressing Shift Select + Run key on the the front panel (see page 25).

Audible Alarms

Condition	Audible Pattern
UPS in battery backup mode (battery voltage: 100% - 90%)	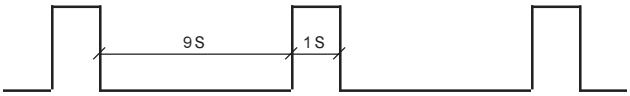
UPS low battery voltage (voltage less than 90%)	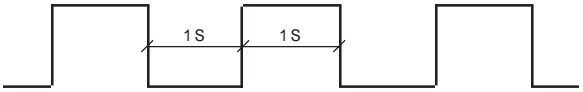
Overload	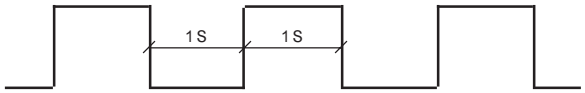
Fault	

Liquid Crystal Display (LCD) Functions

The LCD screen is a 2-line by 16 character wide liquid crystal display (see page 25). The LCD displays information about the operation of the UPS. It should be used in conjunction with the LED display (see see page 25) and the audible alarms (see this page) for total system monitoring. The LCD screen displays information which may be shown only on specific lines of the display. This information is determined by the UPS operating mode and conditions. These messages are shown in the LED displays and LCD screens starting on pages 26 through 38.

Display and Keys

Front Panel Layout

Refer to this illustration (see page 44 for location) for all of the UPS front panel operating procedures.

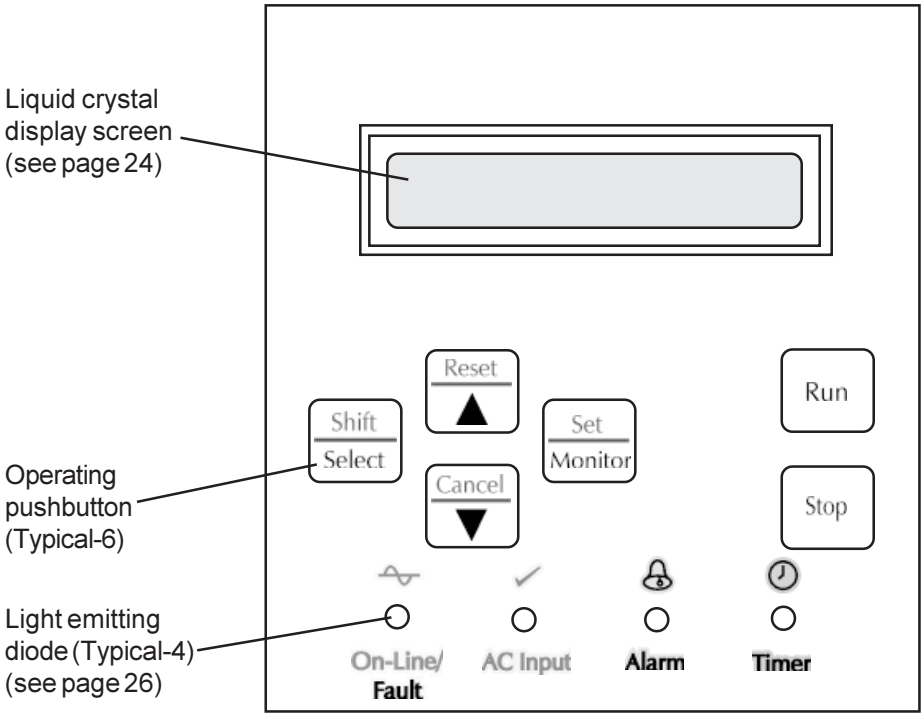

Keys

Refer to this illustration for all of the UPS front panel operating procedures.

Key	Functional Description
Shift / Select	Press and hold this key while pressing one of the other keys to execute the function marked above the upper line of the key. Pressing this key alone enters the mode set on the internal data setting LCD screen (see page 30).
Reset ▲	Scrolls the display upward or with shift key resets the display.
Cancel ▼	Scrolls the display downward or with shift key cancels the preceding operation.
Set / Monitor	Press and hold this key to view the Data Display Screens (see page 28). Continue to press this key to access the Data Setting Screens (see page 30).
Run	Runs the UPS or with shift key silences the trouble indicator audio alarm.
Stop	Stops the UPS and switches to bypass mode.

Display and Keys

Light Emitting Diode (LED) Displays

The following list describes the conditions necessary for each LED lamp to be "on".

Indicator	LED Condition	Functional Description
On-Line/ Fault	Lights in green	Normal UPS (inverter) in operation
	Flashes in green	UPS output off
	Lights in red	UPS failure (no output)
	LED off	Bypass operation on (inverter off)
AC Input	Lights in green	Normal UPS input AC voltage
	Flashes in green	UPS input AC overvoltage
	LED off	UPS input AC undervoltage (power failure)
Alarm	Lights in amber	Warning
	Flashes in amber	Warning
	LED off	Normal UPS (inverter) in operation
Timer	Lights in green	Schedule/timer setting
	Flashes in green	Execution notice of reserved operation (5 mins. in advance)
	LED off	No schedule/timer setting

Display Screens

UPS Start-up Screens

The LCD will automatically display the basic system start-up functions when AC input power is turned on to the unit (see "Starting the UPS on page 39). The basic start-up functions system function indicate the operating state of the unit. If the correct ac input power is available and no abnormal operating conditions are present then the following system message will be displayed on the LCD screen:

```
TOSHIBA 1600 UPS
INITIALIZING...
```

The LCD will automatically and sequentially display the date function on the first line and the time function on the second line. The following screen is an example. The correct date and time can be set (see Date Time function setting on page 30):

```
11/04/1999(WED)
15:22:47
```

The LCD will automatically and sequentially display on the first line that the UPS is in bypass operation mode and the second line will display the percentages of maximum load that are connected. The left value is the phase U load and the right value is the phase V load. This screen will continue to be displayed until the Run key is pressed unless the automatic operation (see 'auto run' page 30) is set to "Y". If the connected loads are varied then the load percentages will change. The UPS inverter is not "on" and running and if the AC input power is removed from the unit the output will stop:

```
BYPASS OPERATION
LOAD ##%/##%
```

Note: If input voltage is removed while UPS is in this state then the output stops.

The UPS operation starts immediately when the Run key is pressed or will start if the automatic operation is set to turn it on (see 'auto run' data setting screen on page 30). The LCD will automatically display on the first line that the UPS is in the normal operation mode and the second line will display the percentages of maximum load that are connected. The left value is the phase U load and the right value is the phase V load:

```
UPS OPERATION
LOAD ##%/##%
```

The UPS internal batteries are automatically tested and the following screen appears while the testing is being done. The first line indicates that a battery test is occurring. The second line indicates the present battery voltage level as a percentage of full charge:

```
BATTERY TEST
BAT VOLTAGE  ##%
```

The LCD will automatically and sequentially display on the first line that the UPS is in normal operation mode. The second line will display the percentages of maximum load that are connected. The left value is the phase U load and the right value is the phase V load.

```
UPS OPERATION
LOAD ##%/##%
```

Display Screens (cont'd)

Data Display Screens

The 'Data Display Screens' sequentially displays all normal UPS operating data display screens as the 'down' arrow key is pressed. The 'up' arrow can also be pressed at any time to back up to the previous screen. These 'Data Display Screens' are accessed from the last 'UPS Start-up Screen' :

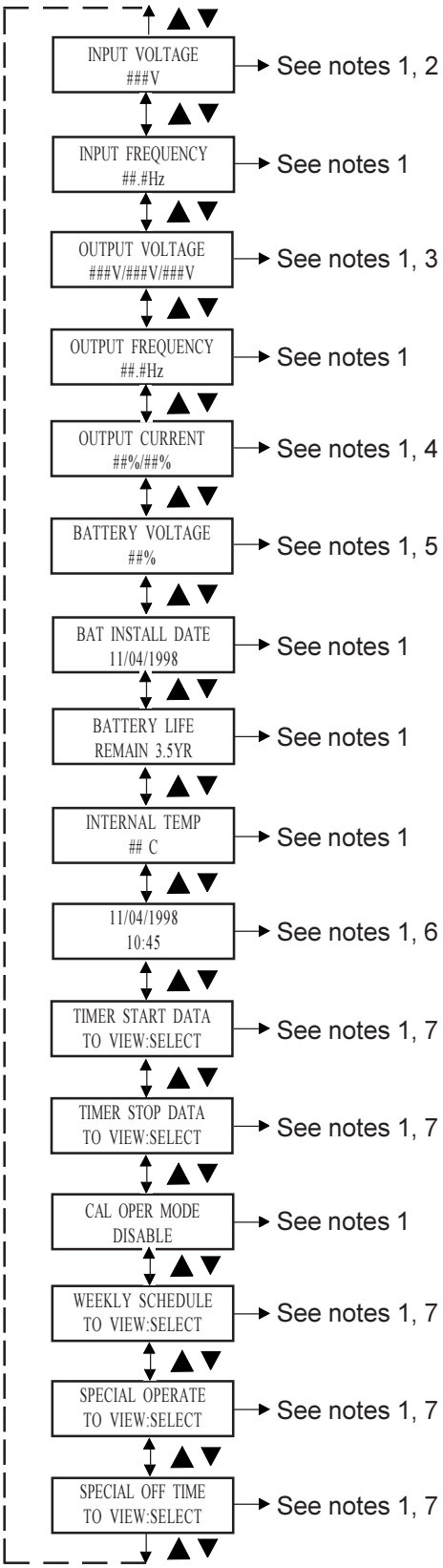

Notes:

1) If the Set/Monitor key is pressed from any of the Data Display Screens then the display will advance to the Data Setting Screens. (See page 30)

2) Displays L-L input voltage (when an isolation transfprmer is used, the unit senses input voltage from the secondary side and there may be a +/- 3 volt difference between the display reading and the actual input voltage).

3) Displays L-N (U-phase)/L-N (V-phase)/L-L output voltages.

4) Displays the U-phase and V-phase current as a % of maximum load capacity at a 0.7 lagging P.F.

5) Displays the battery charge voltage as a % of the rated nominal DC voltage of the batteries.

6) Date and Time setting

7) If the Shift/Select key is pressed from any one of the Timer Start Data, Timer Stop Data, Weekly Schedule, Special Operate, and Special Off time screens then special 'Data Display Screens are viewed. These functions can only be changed by serial communication interface.(See page 29).

Display Screens (cont'd)

Data Display Screen

These special 'Data Display Screens' show data which can only be viewed here. It must be changed through the serial communication interface (RS232C). For information on the software used for this function, contact the nearest Toshiba sales office:

Cont'd from Timer Start Data Screen page 28

START TIME 1 DAY
##HR ##MIN ##SEC

→ See notes 1, 2

Cont'd from Timer Stop Data Screen page 28

STOP TIME 1 DAY
##HR ##MIN ##SEC

→ See notes 1, 2

Cont'd from Weekly Schedule Data Screen page 28

WEEKLY (MON)
(1) ###:## - ###:##

→ See notes 1, 2

Cont'd from Special Operate Data Screen page 28

START 1:
###:## - ###:##

→ See notes 1, 2

Cont'd from Special Off Time Data Screen page 28

STOP 1:
###:## - ###:##

→ See notes 1, 2

Notes:

1) If the [Set/Monitor] key is pressed from any of these Data Display Screens then the display will advance to the Data Setting Screens (See page 30).

2) Pressing the [Shift/Select] + [Cancel] returns to the Data Display Screens.

Display Screens (cont'd)

Data Setting Screens

The 'Data Setting Screens' sequentially display the data variables that can be set. Each variable is displayed as the 'down' arrow key is pressed. The 'up' arrow can also be pressed at any time to back up to the previous screen:

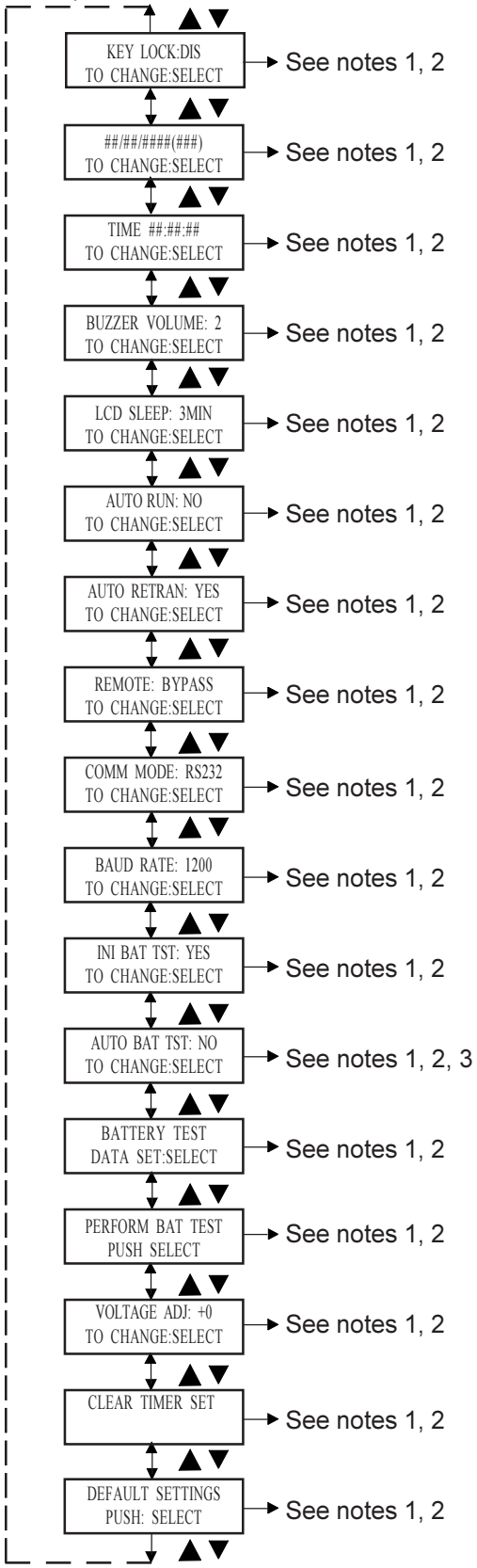

1) If the Set/Monitor key is pressed from any of the Data Setting Screens then the return is to the UPS Operation screen in the UPS Start-up Screens (See page 27).

2) For explanations on changing each of these settings when the Shift/Select key is pressed (See pages 31 - 35).

3) When the automatic battery test mode has been set to YES then the following screen is displayed when scrolling through the data setting screens:

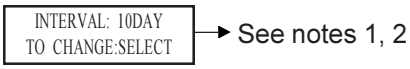

NOTE: The data variables shown for each screen indicate the default data set at the factory (unless previously changed by the user).

Display Screens (cont'd)

Data Setting Screens

The following screens show the setting procedure for setting the data variables. They are accessed from the main 'data setting screens' (see page 30) when the Shift/Select key is pressed:

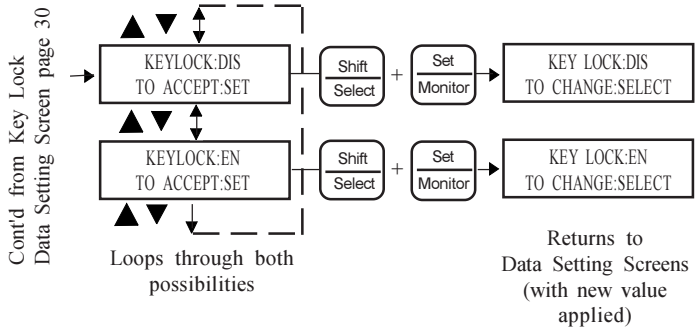

The Keylock function allows the operator to disable the RUN + STOP button functions. When this function is set to EN the unit will remain in the operating mode it was in when enabled and will not be able to be changed with the RUN + STOP buttons until this function is disabled.
With this function set to DIS, the RUN + STOP buttons function normally.
The default setting is DIS.

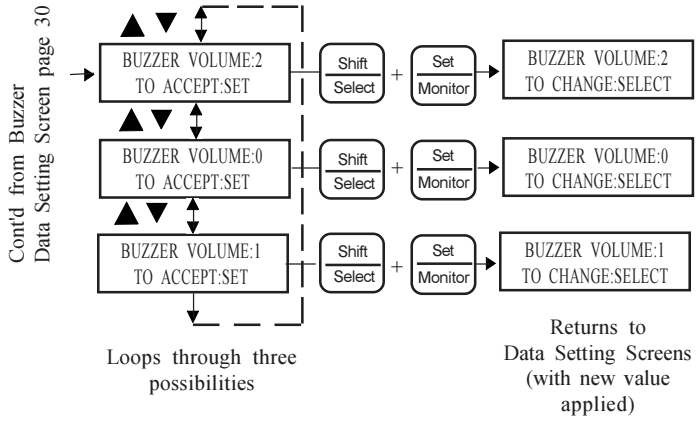

2 = High
1 = Low
0 = Off
Default setting is 2 = High (loudest)

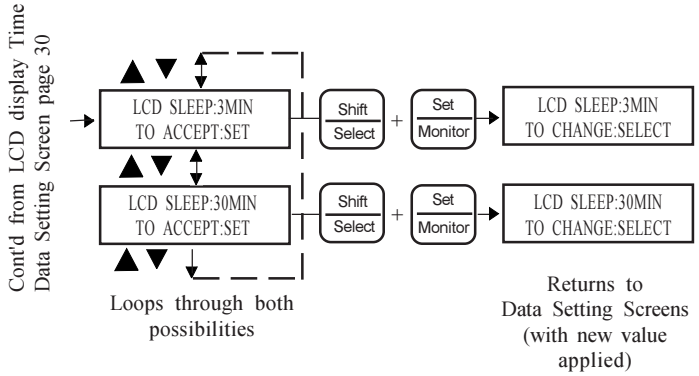

Displays the number of minutes (3 or 30) of idle time before the LCD will go blank (this is to prolong LCD life). The LCD will be active again once a display button is pressed.
Default setting is 3 min.

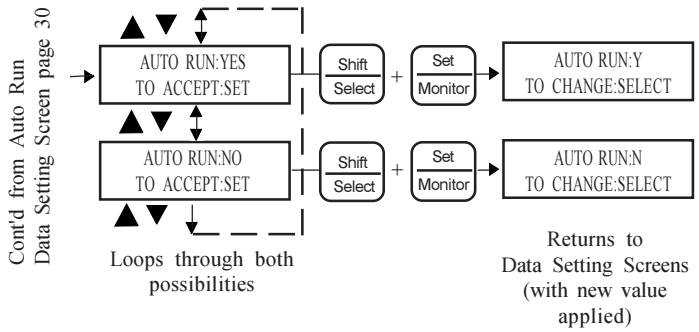

If set to YES, the unit will automatically start up in the UPS mode (on line) when input voltage is applied, regardless of what mode it was in when shut down.
Default setting is NO.

Display Screens (cont'd)

Data Setting Screen

The following screens show the setting procedure for setting the data variables. They are accessed from the main 'data setting screens' (see page 30) when the Shift/Select key is pressed:

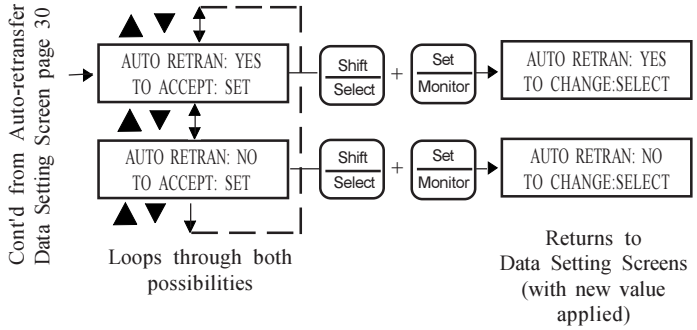

Set to Y (yes), the unit will automaticallly retransfer back to UPS mode after transferring momentarily to bypass mode to prevent a sag in the output due to an instantaneous load change. If set to N (no), the unit will attempt to ride out the load change and the output voltage could be decreased momentarily.

Default setting is NO.

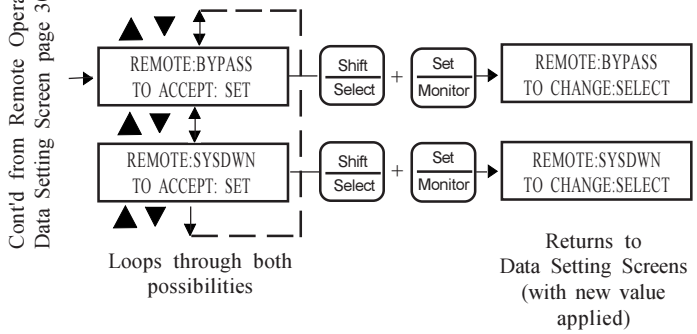

This setting uses the remote switch to place the unit to bypass mode.

This setting uses the remote switch to shut the output of the unit off. While off, the on line LED will be flashing and the LCD will display the message: OUTPUT SHUTDOWN REMOTE OFF

The remote switch connection is on the rear terminal block at positions 11 and 12. The unit will transfer 2 secs. after closing the remote switch and will return to UPS mode 2 secs. after the switch opens.

Default setting is BYPASS

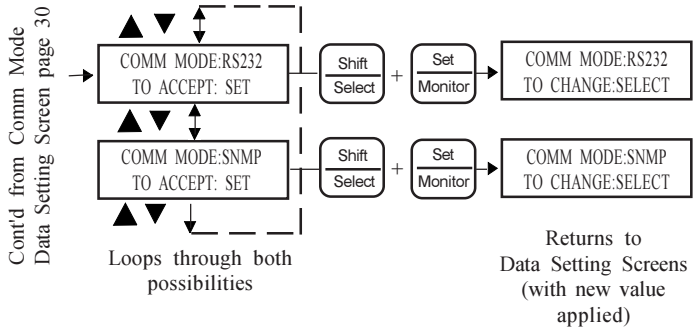

This setting selects the RS232 as the communication port, SNMP is disabled.

This setting selects the SNMP as the communication port, RS232 is disabled.

Default setting is RS232

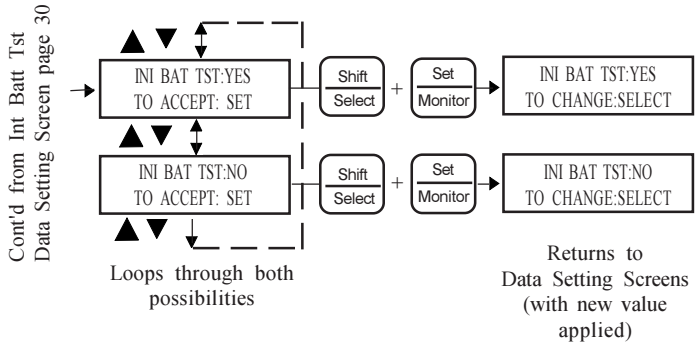

Set to YES, the unit will perform a battery test the first time the unit transfers to On Line. If Auto Run (see page 31) is set to YES then the battery test will be done at power up.

Default setting is YES

Display Screens (cont'd)

Data Setting Screen

The following screens show the setting procedure for setting the data variables. They are accessed from the main 'data setting screens' (see page 30) when the Shift/Select key is pressed:

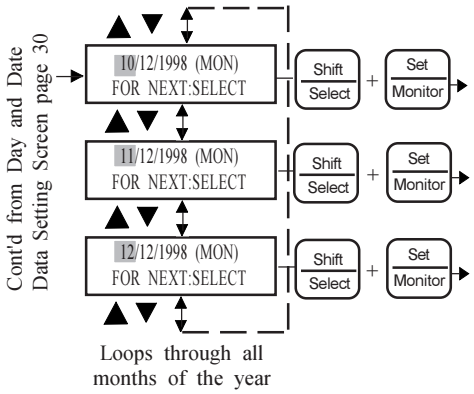

When the SHIFT + SELECT keys are pressed, the "flashing" portion of the day/date is alternately moved to the month/day of month/year/day of week. The UP and DOWN keys allow scrolling through all possible settings in each the four selections. The last choice is to accept all of the four selections made by pressing SHIFT + SET. At any time all of the preceeding operations can be canceled by pressing SHIFT + CANCEL. Canceling returns to the 'Data Setting Screens' menu.

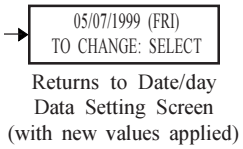

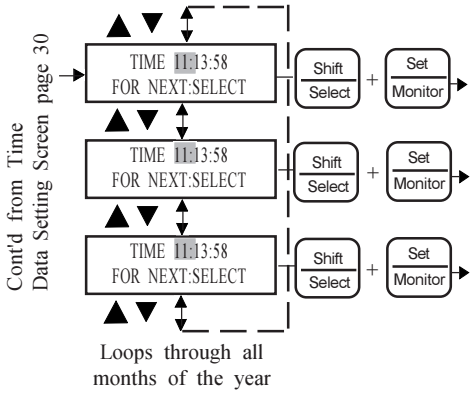

When the SHIFT + SELECT keys are pressed, the "flashing" portion of the time is alternately moved to the hours:minutes:seconds. The UP and DOWN keys allow scrolling through all possible settings in each the three selections. The last choice is to accept all of the three selections made by pressing SHIFT + SET. At any time all of the preceeding operations can be canceled by pressing SHIFT + CANCEL. Canceling returns to the 'Data Setting Screens' menu.

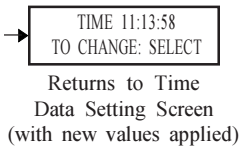

Display Screens (cont'd)

Data Setting Screen

The following screens show the setting procedure for setting the data variables. They are accessed from the main 'data setting screens' (see page 30) when the Shift/Select key is pressed:

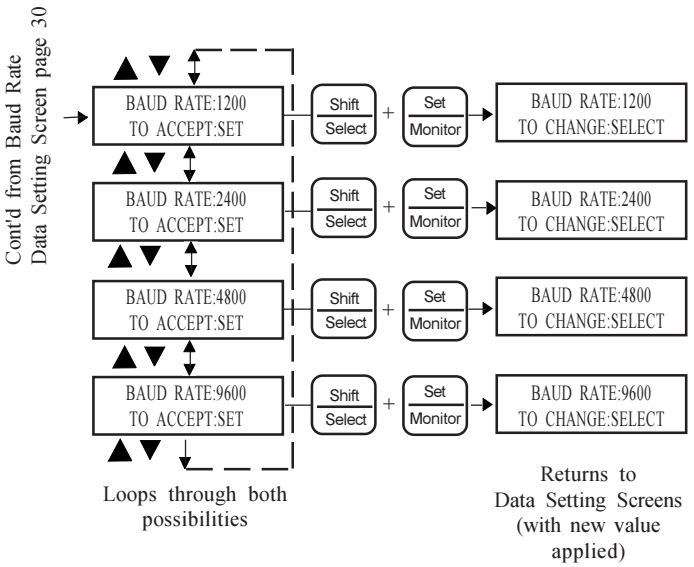

This parameter allows the correct communication baud rate to be set.

Default is 1200

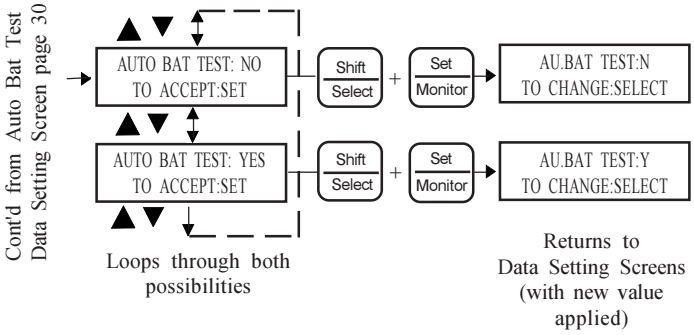

If set to YES, the unit will perform a periodic battery test at the interval set in the interval parameter on page 34.

Default is NO

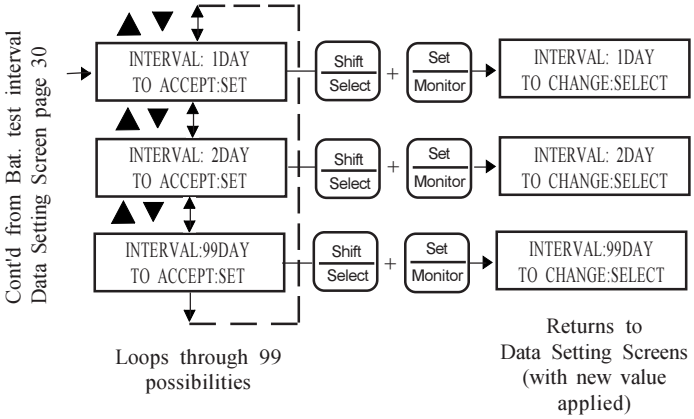

Selects the interval (in days), at which the battery test will run (1 day through 99 days).

Display Screens (cont'd)

Data Setting Screen

The following screens show the setting procedure for setting the data variables. They are accessed from the main 'data setting screens' (see page 30) when the Shift Select key is pressed:

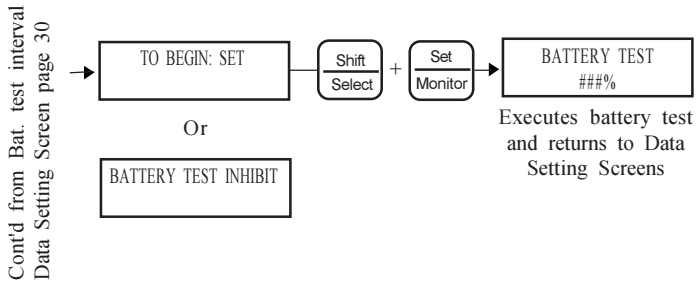

This parameter has no options to set. A battery test will be performed once the SHIFT + SET button is pressed.

If the BAT TEST INHIBIT message is displayed, it indicated that a battery test has been performed recently. The UPS will not allow frequent battery tests to insure that the batteries remain in a fully charged state.

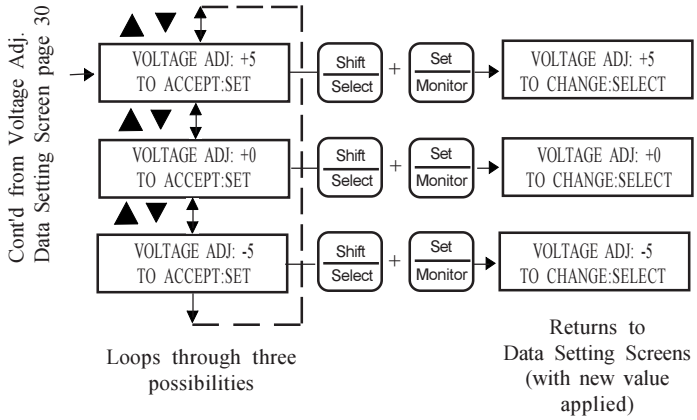

This parameter allows the user to offset the output voltage (while the unit is running on-line), by 1% increments between -5% to +5%.

Default value is +0

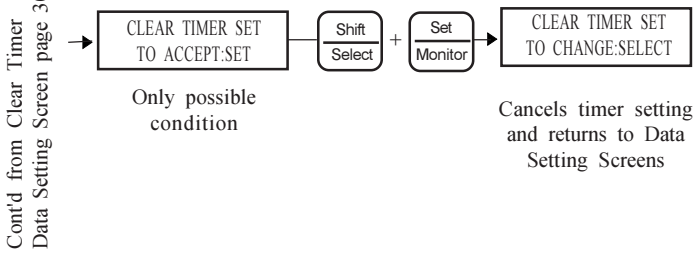

This parameter has no options to set. Pressing the SHIFT + SET button while this message is displayed will cancel timer setting.

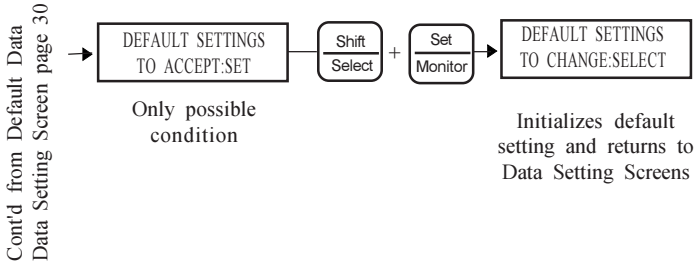

This parameter has no options to set. Pressing the select button while this message is displayed will reset all parameters to their default values.

Display Screens (cont'd)

System Warning Messages

Warning messages will be displayed when an abnormal operating condition occurs. The following chart shows allowable messages.

LCD Message	LED Message	Meaning/Action
OVERLOAD:132%	Alarm Amber LED Flashes	***Meaning:*** The UPS is overloaded (110% or above). Unit will switch to bypass operation or shut down if no action is taken. ***Action:*** Shut down excess equipment to reduce load
OL: REDUCE LOAD	Alarm Amber LED Flashes	***Meaning:*** The UPS is overloaded (110% or above) and has switched to bypass. Unit will shut down the output if no action is taken. ***Action:*** Shut down excess equipment to reduce load
BATTERY LOW 87%	Alarm Amber LED Flashes	***Meaning:*** The battery level has dropped low (about 90% or less) during operation. Continued operation in this mode will deplete battery and cause output shut down. ***Action:*** Immediately shut down the load equipment in an orderly fashion and then press the Stop key.
UPS TEMP 52°C	Alarm Amber LED Flashes	***Meaning:*** The unit is overheated (warning is given when the internal temperature reaches and exceeds 50° C. ***Action:*** Check to see if the ambient temperature is abnormally high (40° C or more) If so turn on air conditioning. Also check ventilation fan at the back of the unit. Otherwise, shut down the unit and call for service.
REPLACE BAT SOON	Alarm Amber LED Flashes	***Meaning:*** Advance notice that batteries are nearing the end of their useful life. ***Action:*** Contact your Toshiba authorized service center to arrange for battery replacement.
REPLACE BATTS	Alarm Amber LED On	***Meaning:*** Batteries at end of life. ***Action:*** Have batteries replaced immediately.
REQUIRES SERVICE PLEASE SERVICE	Alarm Amber LED On	***Meaning:*** Inspection of unit is advised. ***Action:*** Have inspection/service performed.

Display Screens (cont'd)

System Fault Messages

When an abnormal operating condition occurs the following fault message will be displayed:

FAULT (BYP OPER)
OUT-0V DC-0V >

If the input voltage is normal when the fault occurs then the UPS will switch immediately to the bypass mode to continuously feed power to the load. If the input power is abnormal while in the bypass mode the UPS will shut down the output to prevent load equipment damage.

Press Key: Cancel ▼ or Reset ▲ to view the messages explaining the system fault (the ">" indicates other faults:

LCD Message	LED Message	Meaning/Action
DC-OC	On-Line/ Fault — Red LED On	***Meaning:*** DC overcurrent condition occurred. ***Action:*** UPS is probably faulty. Check the UPS operating conditions at time of fault. Not advisable to try restarting. **Call for service**.
OUT-OV	On-Line/ Fault — Red LED On	***Meaning:*** Output overvoltage condition occurred. ***Action:*** UPS is probably faulty. Check the UPS operating conditions at time of fault. Not advisable to try restarting. **Call for service**.
OUT-UV	On-Line/ Fault — Red LED On	***Meaning:*** Output undervoltage condition occurred. ***Action:*** UPS is probably faulty. Check the UPS operating conditions at time of fault. Not advisable to try restarting. **Call for service**.
DC-OV	On-Line/ Fault — Red LED On	***Meaning:*** DC overvoltage condition occurred. ***Action:*** UPS is possible faulty, wiring error, input overvoltage or connection of a motor load. Try restarting. If condition persists call for service.
OVERLOAD	On-Line/ Fault — Red LED On	***Meaning:*** Output overload condition occurred. ***Action:*** Reduce equipment load to 100% or less and try restarting.
DC-UNBALANCE	On-Line/ Fault — Red LED On	***Meaning:*** DC voltage unbalance occurred. ***Action:*** Possible causes are UPS fault or connection of half-wave rectifier load. Check load and try restarting. If condition persists, call for service.
OVER HEAT	On-Line/ Fault — Red LED On	***Meaning:*** Overheating condition occurred. ***Action:*** Check unit for blocked or in-operable fan. Lower ambient temperature if 40° C or greater. Bypass operation will also cease if overheat condition is not corrected within 1 hr. from inverter shutdown. Try restarting and if condition re-occurs plan for total shutdown and call for service.

Display Screens (cont'd)

Status Change Indications

Warning messages will be displayed when an abnormal operating condition occurs.
The following chart shows allowable messages.

LCD Message	Meaning/Action
AUTO RETRANSFER	***Meaning:*** The UPS has automatically entered the bypass mode because of a detected larger output current than the inverter can normally handle. ***Action:*** Remove excess load equipment to reduce the output current.
ASYNC OPERATION	***Meaning:*** The UPS input frequency is outside of the +/- 1Hz syncronization frequency tolerance of the inverter output frequency. ***Action:*** No action is necessary. Unit cannot switch to bypass mode while the input frequency is out of tolerance with the output frequency.
BATTERY LOW	***Meaning :*** The battery level has dropped low (about 90% or less) during operation. Continued operation in this mode will deplete battery and cause output shut down. ***Action:*** Immediately shutdown the load equipment in an orderly fashion and then press the Stop key.
TIME TO RUN 4MIN	***Meaning:*** A start notice is displayed 5 minutes before starting the UPS when the start timer is set by communication. ***Action:*** None required.
TIME TO STOP 10SEC	***Meaning:*** A stop notice is displayed 5 minutes before stopping the UPS when the stop timer is set by communication. ***Action:*** None required.
KEYLOCK:EN	***Meaning:*** When the key lock is set or the timer is set to start/stop the UPS by data communication,pressing the Run or Stop key displays this message. ***Action:*** None required.

Manual Run/Stop Operation

Starting the UPS

Turn the main circuit breaker (MCCB) on the back of the UPS (see page 44) to the "on" position (the breaker should normally remain in the "on" position).

Check that the AC Input LED on the front panel (see page 25 and 26) lights 'green'.

All LED's on the front panel may light for a moment when the input breaker is turned "on". This is normal. The UPS will now be supplying power in the bypass mode.

CAUTION

Note: When running the UPS for the first time or after the power failure backup operation, charge the battery for at least 24 hours (input breaker "on") before operating the connecting load. Using the UPS without charging the battery shortens the battery backup operation time, which could result in the destruction of data in case of a power failure.

Press Run to begin UPS operation (see page 29 for startup screens).

Stopping the UPS

To stop the UPS, press the Stop key approximately 1 second until the On-Line/Fault LED changes from green to "off". The UPS is now in the bypass mode.

To completely stop the UPS, turn the input breaker at the back of the UPS to the "off" position.

CAUTION

Note: **If the input breaker is turned off while UPS is in the bypass state, the output power stops. *Any load devices will lose power.*** Ensure that all sensitive loads have been previously shut down.

UPS Protection System

System Protection Features

The following schematic shows the electrical locations of the protection devices on the 2.4 kVA, 3.6 kVA, 6.0 kVA and 8.0 kVA UPS models.

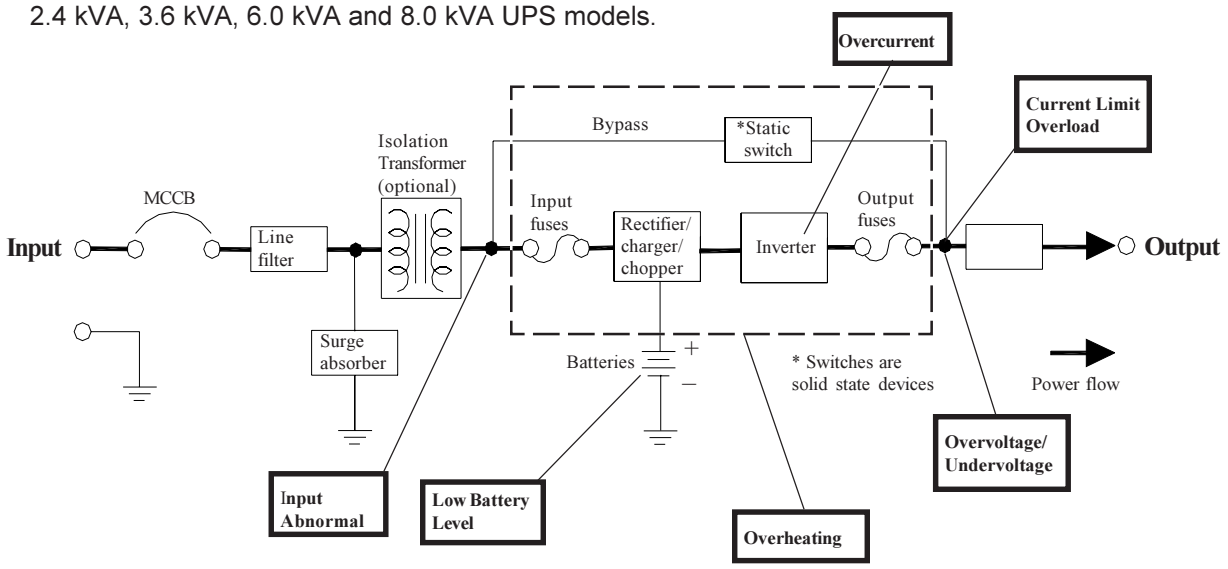

System Protection Functions

The following charts show the built-in UPS system fault protection functions on the 2.4 kVA, 3.6 kVA, 6.0 kVA and 8.0 kVA models.

Built-In UPS Fault Protection Functions

Protection Item	Output overvoltage	Output undervoltage	Output overload
LCD Message	OUT-OV	OUT-UV	OVER LOAD
Cause	Control malfunction; chip error	Control malfunction; wire disconnected	Overload; short circuit at load
Operation Mode After Fault	Bypass operation; chopper and inverter are stopped		Inverter OL: Transfer to bypass; inverter stopped Bypass OL: inverter, chopper, and bypass stopped
Audible Alarm	Yes; continuous buzzer		See 'Audible Alarm Functions' on page 24
Visible Alarm	RED fault LED "on"		Inverter OL: No fault lamp Bypass OL: Fault lamp "on"
Relay Contact Alarm	Fault relay closed; bypass relay closed		Fault relay open; Inverter OL: Bypass relay closed Bypass OL: Bypass relay open
Auto-retransfer	No		Inverter OL: Yes if bypass is OK Bypass OL: No

UPS Protection System (cont'd)

System Protection Functions (cont'd)

Built-In UPS Fault Protection Functions (cont'd)

Protection Item	Internal overheat	DC circuit overvoltage	DC circuit overcurrent
LCD Message	OVER HEAT	DC-OV	DC-OC
Cause	Fan failure; high ambient temperature	Chopper malfunction	Inverter/chopper fault
Operation Mode After Fault	Bypass operation; chopper and inverter are stopped		
Audible Alarm	Yes; continuous buzzer		
Visible Alarm	RED fault lamp "on"		
Relay Contact Alarm	Fault relay closed; bypass relay closed		
Auto-retransfer	No		

Built-In UPS Fault Protection Functions (cont'd)

Protection Item	DC voltage unbalance
LCD Message	DC UNBALANCE
Cause	UPS fault, connection of a halfwave rectifier load
Operation Mode After Fault	Shutdown; no output
Audible Alarm	Yes; see page 24 "Audible Alarm Functions"
Visible Alarm	RED fault LED "on"
Relay Contact Alarm	Fault relay closed
Auto-retransfer	No

Preventive Maintenance/Parts Replacement

Preventive Maintenance

Toshiba's 1600 Series of uninterruptible power systems have been designed to provide years of trouble-free operation requiring a minimum of preventive maintenance.

The best preventive measure that the UPS user can take is to keep the area around the unit, particularly the air inlet vents, clean and free of moisture and dust accumulations.
If the atmosphere of the installation site is very dusty, use a vacuum cleaner to periodically remove dust accumulations around and from the unit.

CAUTION

Only a qualified Toshiba Representative should be allowed to perform any routine maintenance or service on this equipment other than those preventive maintenance details which are described directly above this caution.

Parts Replacement

The following list shows recommended intervals for periodic replacement of certain UPS parts:

1) Batteries: In order to maintain system reliability, the UPS unit's batteries should be replaced on a regular schedule. To ensure reliable operation, all of the batteries should be replaced at the same time. Use the following chart for replacement:

UPS Battery Replacement

Battery lifetime	Batt Amb Temp	Average lifetime	(% Reduced)
(When discharged once	20-25° C (68-77° F)	Approx. 5 yrs	0%
every 3 months to 100%	30° C (86° F)	Approx. 3.5 yrs	30%
depth of discharge; data	35° C (95° F)	Approx. 2.5 yrs	50%
published by Yuasa	40° C (104° F)	Approx. 1.8 yrs	66%
battery manufacturer)	45° C (113° F)	Approx. 1.25 yrs	75%

2) Aluminum electrolytic capacitors: Replace once every 5 years.

3) Fuses: Replace once every 7 years.

4) Cooling fan: When operated in an ambient temperature of 30° C (86° F) to 40° C (104° F), replace every 3.5 years.

   When operated in an ambient temperature of less than 30° C (86° F) , replace every 5 years.

External Layouts/Dimensions/Shipping Weights

Optional Receptacle Panels Available

2.4 kVA	
UE3G2L024C6(T)	208/240V, Hardwire
UE3G2L024C6P3	Line Cord: L6-30P 6ft. Panel: 3 L6-30R, 2 5-15R Duplex
UE3G2L024C6PA	Line Cord: L6-30P 6ft. Panel: 2 L6-30R, 1 L6-20R, 2 5-15R Duplex
3.6 kVA	
UE3G2L036C6(T)	208/240V, Hardwire
UE3G2L036C6P3	Line Cord: L6-30P 6ft. Panel: 3 L6-30R, 2 5-15R Duplex
UE3G2L036C6P3B	Line Cord: L6-30P 6ft. Panel: 2 L6-30R, 1 L6-20R, 2 5-15R Duplex
UE3G2L036C6P3R	Line Cord: L6-30P Panel: 3 L6-20R, 3 5-15R, 1 L5-15R
UE3G2L036C6P5	Line Cord: L6-30P 6ft. Panel: 4 5-15R Duplex
UE3G2L036C6P5N	Line Cord: L6-30P Panel: 4 5-20R Duplex Ind. Fuse
6.0 kVA	
UE3G2L060C6(T)	208/240V, Hardwire
UE3G2L036C6P3	Line Cord: 6-50P 6ft. Panel: 4 L6-30R, 2 5-15R Duplex
UE3G2L060C6P3B	Line Cord: 6-50P 6ft. Panel: 3 L6-30R, 1 L6-20R, 2 5-15R Duplex
UE3G2L060C6P3R	Line Cord: 6-50P Panel: 4 L6-20R, 3 5-15R, 1 L5-15R
UE3G2L060C6P5	Line Cord: 6-50P 6ft. Panel: 5 5-15R Duplex
UE3G2L060C6P5N	Line Cord: L6-30P Panel: 5 5-20R Duplex Ind. Fuse
8.0 kVA	
UE3G2L060C6(T)	208/240V, Hardwire
UE3G2L036C6P3	Line Cord: 6-50P 6ft. Panel: 4 L6-30R, 2 5-15R Duplex
UE3G2L060C6P3B	Line Cord: 6-50P 6ft. Panel: 3 L6-30R, 1 L6-20R, 2 5-15R Duplex
UE3G2L060C6P3R	Line Cord: 6-50P Panel: 4 L6-20R, 3 5-15R, 1 L5-15R
UE3G2L060C6P5	Line Cord: 6-50P 6ft. Panel: 5 5-15R Duplex
UE3G2L060C6P5N	Line Cord: L6-30P Panel: 5 5-20R Duplex Ind. Fuse

External Layouts/Dimensions/Shipping Weights

External Layouts *

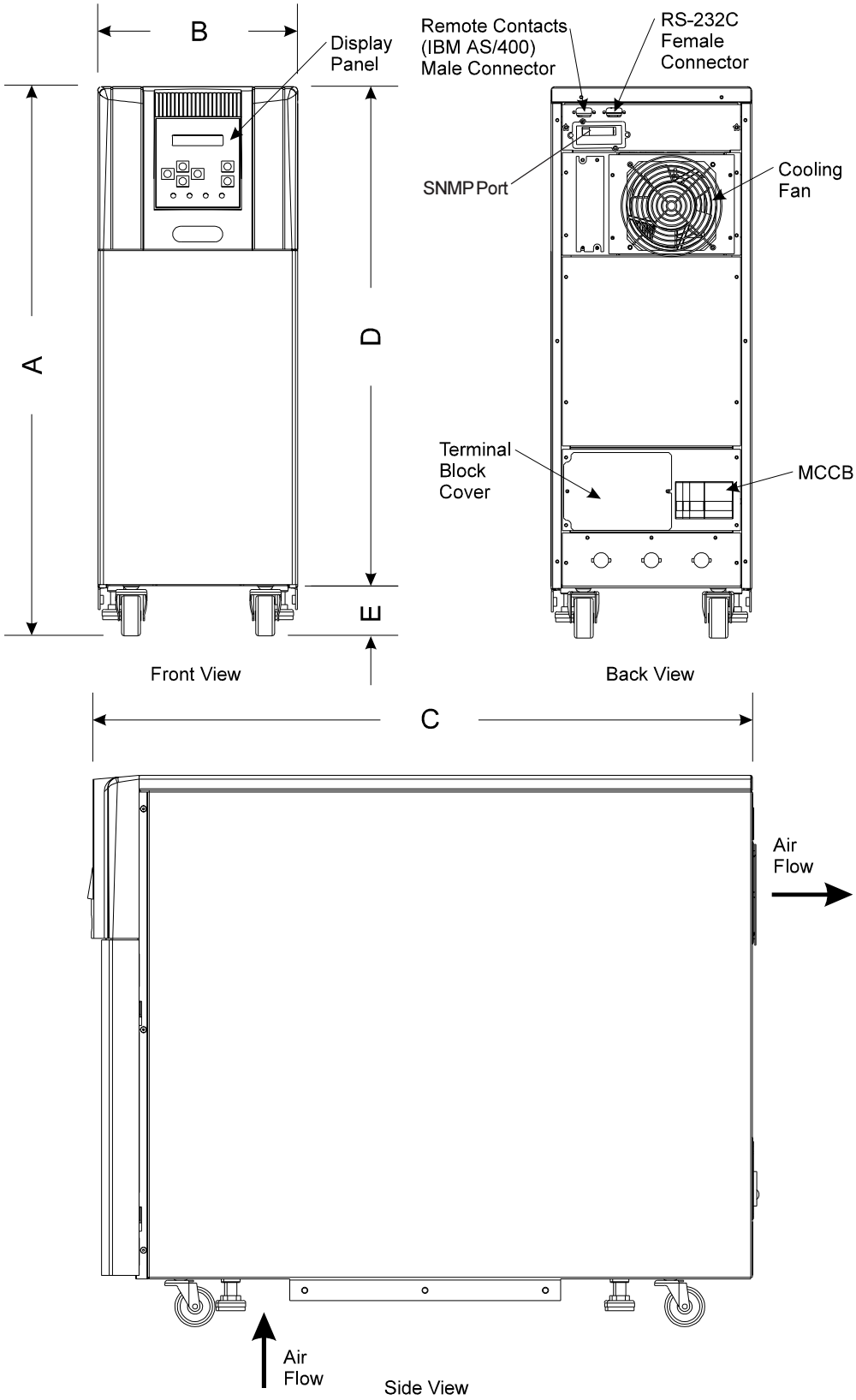

*** Exact layout may differ from this view depending upon size and final configuration of the unit.**

External Layouts/Dimensions/Shipping Weights

Dimensional Data

Model	Dimensions				
	A	B	C	D	E
2.4 KVA	21.75 IN. (552 MM)	10 IN. (254 MM)	30 IN. (762 MM)	18.95 IN. (481 MM)	2.8 IN. (72 MM)
3.6 KVA	21.75 IN. (552 MM)	10 IN. (254 MM)	30 IN. (838 MM)	18.95 IN. (481 MM)	2.8 IN. (72 MM)
6 KVA	27.5 IN. (699 MM)	10 IN. (254 MM)	33 IN. (838 MM)	24.7 IN. (627 MM)	2.8 IN. (72 MM)
8 KVA	28.25 IN. (718 MM)	13 IN. (330 MM)	33.5 IN. (851 MM)	25.45 IN. (646 MM)	2.8 IN. (72 MM)

Shipping Weights

Model	Shipping Weights	
	Pounds	Kilograms
2.4 KVA	280	127
3.6 KVA	280	127
6 KVA	385	175
8 KVA	490	222

INDEX

A

B

C

D

INDEX (cont'd)

INDEX (cont'd)

M

N

O

P

R

INDEX (cont'd)

S

T

U

V

W

TOSHIBA

TOSHIBA INTERNATIONAL CORPORATION

INDUSTRIAL DIVISION

13131 West Little York Rd., Houston Texas 77041

Tel: [713] 466-0277 Fax: [713] 466-8773 Telex: 762078

Printed in U.S.A.